COMICA
PRO AUDIO SOLUTION

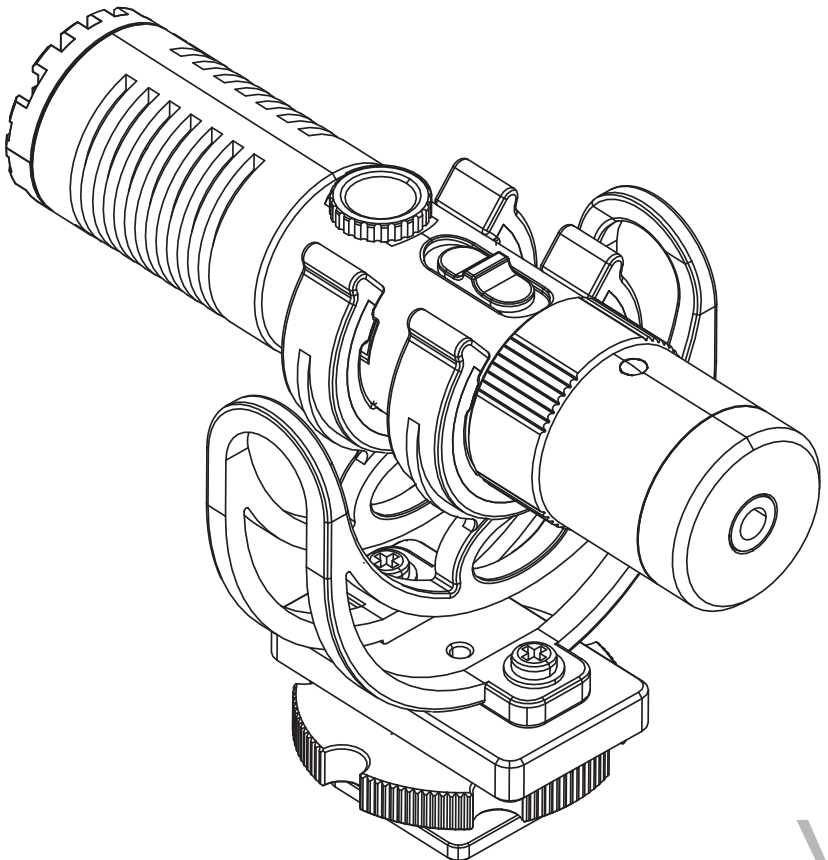

VM10 PRO

Mini Super Cardioid Digital Shotgun Microphone

User Manual

Foreword

Thanks for purchasing COMICA VM10 PRO

Main Features

· Super Cardioid Pattern, Accurate Sound Pickup
· Digital / Analog Output Mode Switch, Universal for Camera and Smartphone
· Stepless Gain Control with Preamp in Digital Mode
· Support Real-time Monitor in Digital Mode
· No Power Driven, Plug and Play
· Professional Shock-mount, Effective Shock Absorption
· Full Metal Material, Super Shielding

Notice

⚠ When working with devices with Lightning interface in digital mode, it is necessary to purchase relevant audio output cable or audio adapter cable by yourself

⚠ Some smartphones with USB-C interface are incompatible in digital mode, such as ViVO and OPPO

⚠ When working in digital mode, the 3.5mm TRS audio output port is intelligently identified as the monitoring port, the gain control knob and digital mode indicator light are available only in digital mode

Item Check List

1. Microphone
2. Shock Mount
3. 3.5mm TRS -TRS Audio Cable
4. 2-in-1 Audio Cable
5. Wind Muff
6. User Manual
7. Warranty Card

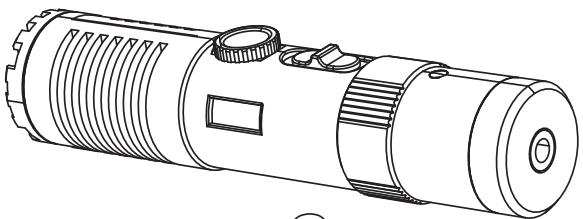

①

②

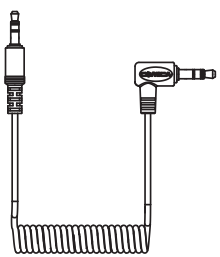

③

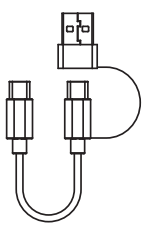

④

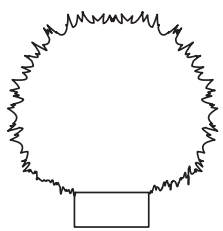

⑤

⑥

⑦

Components and Instruction

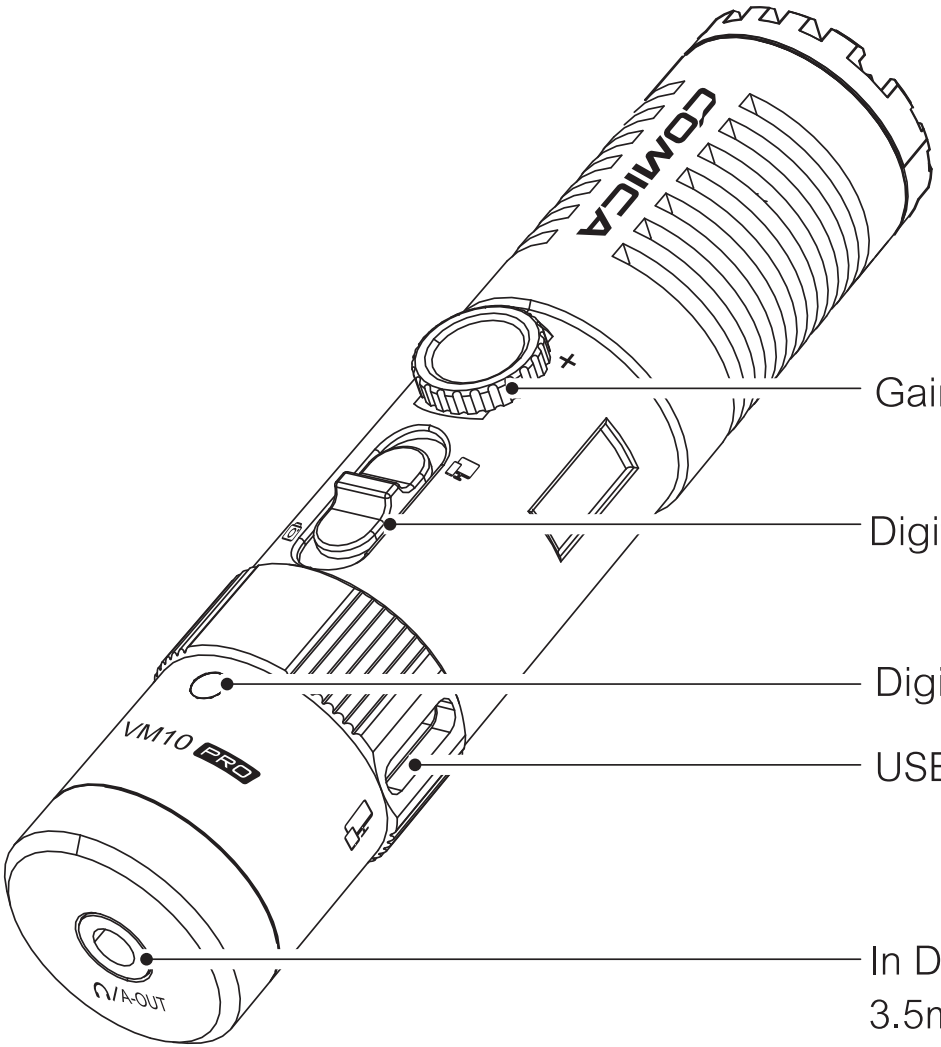

Gain Control Knob

Digital/Analog Modes Switch Button

Digital Mode Indicator Light

USB-C Audio Output Port

In Digital Mode：
3.5mm TRS/TRRS Monitoring Port

In Analog Mode：
3.5mm TRS Audio Output Port

Digital Mode：

1. Set the digital/analog switch button to the “ ” icon;

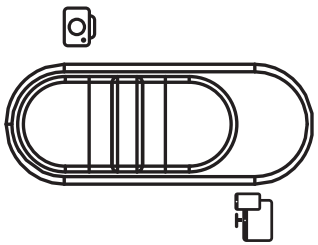

2. Connect the mic and the phone/computer via the 2-in-1 audio cable and related audio cables/adapters. The digital working status indicator is on after successful connection(If the indicator is not on, it may be caused by compatibility/system problems); choose whether to monitor according to your needs.

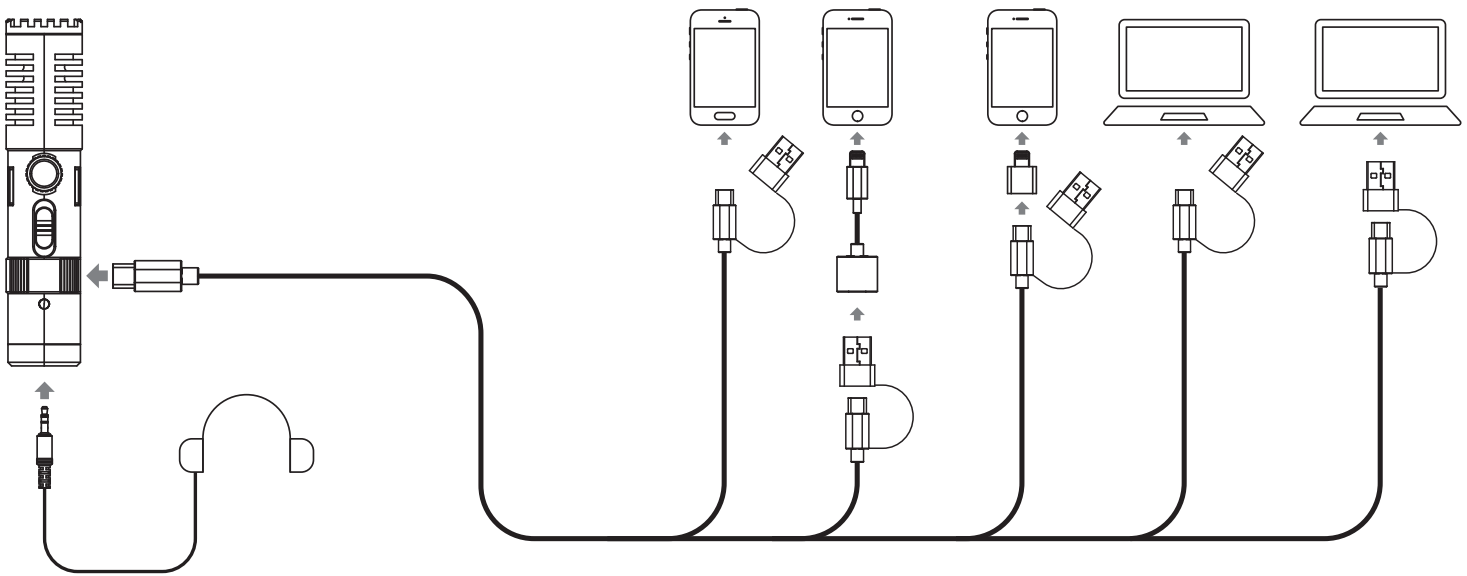

Analog Mode：

1. Set the digital/analog switch button to the “ ” icon;

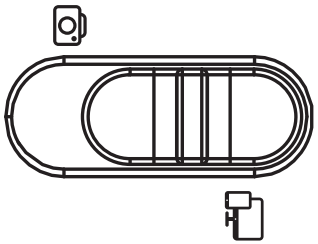

2. When used with camera, it can be connected via 3.5mm TRS-TRS audio cable; when used with phone or computer, it can be connected via 3.5mm TRS-TRRS audio cable.

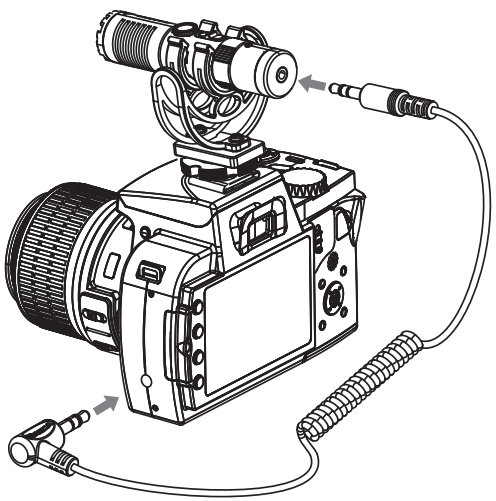

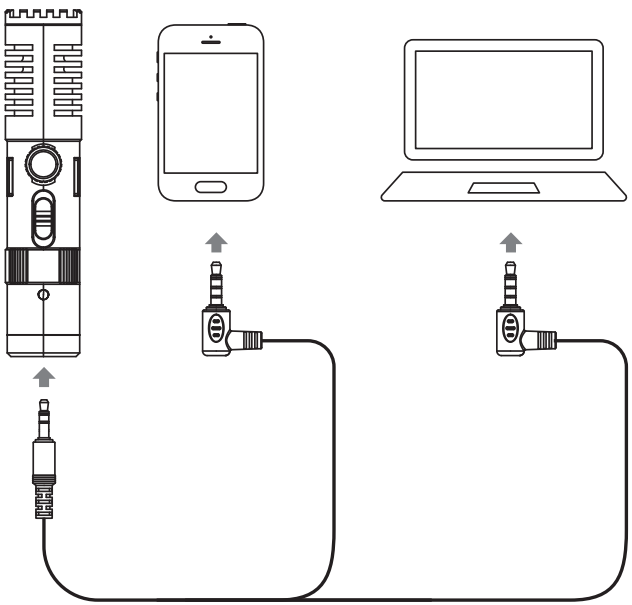

Please purchase corresponding audio cable by yourself when connected with 3.5mm TRRS interface devices

Specification

Polar Pattern	Super Cardioid
Sensitivity	Analog Mode：-35±2dB Digital Mode：-15dB ~ -35dB ±2dB
Frequency Response	60Hz ~ 20kHz
Maximum SPL	120dB
S/N	70dB
Equivalent Noise	24dBA
Dynamic Range	96dB
Sampling Rate	48kHz
Bit Depth	24-bit
Output Port	3.5mm TRS / USB-C
Monitoring Port	3.5mm TRS/TRRS
Dimension	Φ22mm * L92mm
Net Weight	37g
Working Temperature	0℃ ~ 50℃
Storage Temperature	-20℃ ~ 60℃

Website: comica-audio.com

Facebook: Comica Audio Tech Global

Instagram: Comica Audio

YouTube: Comica Audio

The COMICA LOGO is a trademark which is registered and owned by Commlite Technology Co.,Ltd

Email: support@comica-audio.com

COMICA 科唛

专 业 无 线 音 频 品 牌

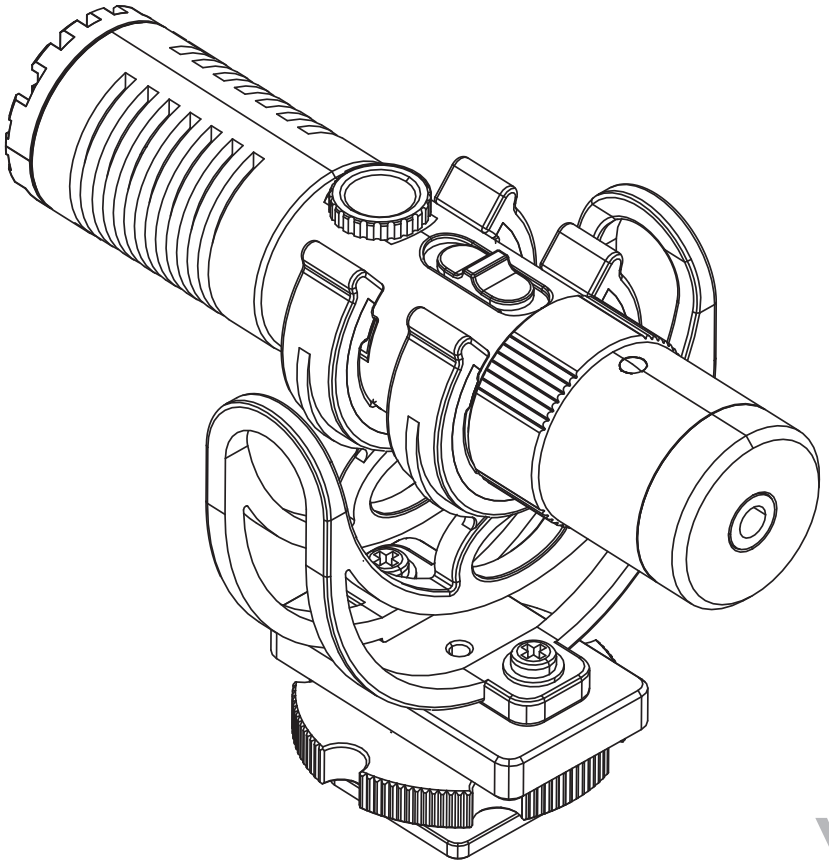

VM10 PRO

迷你超心型数字枪式麦克风

用户使用说明书

前　言

感谢您购买科唛VM10 PRO枪式麦克风

产品主要功能

· 超心型指向，精准拾音
· 可切换数字/模拟双输出模式，通用于手机、相机
· 数字模式下支持前置放大增益调节
· 数字模式下支持实时监听
· 无电驱动，即插即用
· 专业减震支架，高效减震
· 全金属制造，超强屏蔽

注意事项

⚠ 在数字模式下，对于Lightning接口的设备，需要自行配置相关音频输出线或转换线即可使用
⚠ 在数字模式下，部分USB-C接口的手机会出现不兼容的情况，如ViVO, OPPO
⚠ 在数字模式下，3.5mm TRS音频输出口被智能识别为耳机监听口,增益调节旋钮和数字工作状态指示灯仅在此模式下可使用

包装清单

1. 麦克风
2. 减震架
3. 3.5mm TRS-TRS音频连接线
4. 二合一音频连接线
5. 防风毛
6. 说明书
7. 保修卡

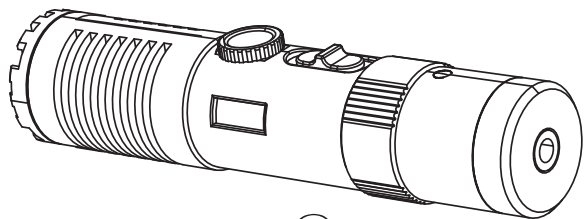

①

②

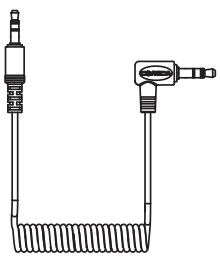

③

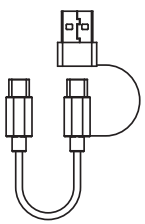

④

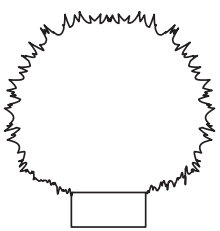

⑤

⑥

⑦

部件介绍及说明

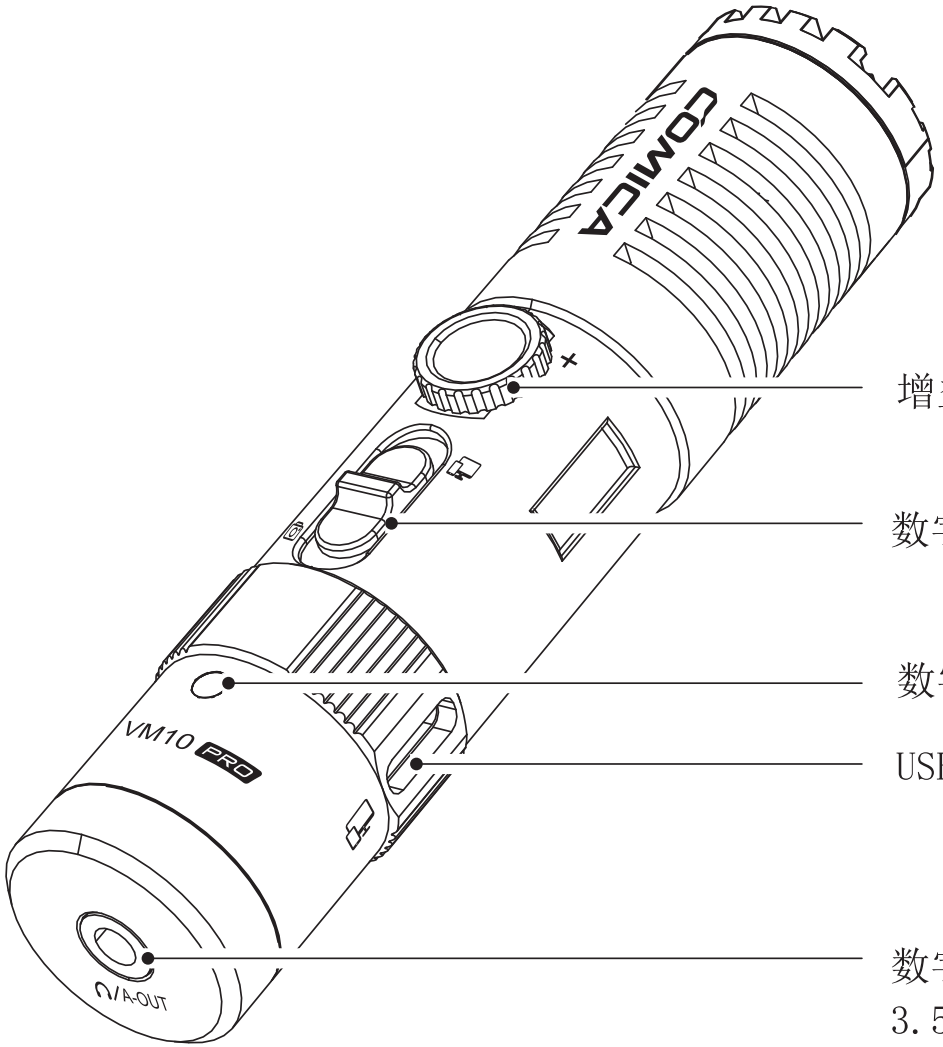

增益调节旋钮

数字/模拟模式切换开关

数字工作状态指示灯

USB-C音频输出口

数字模式：
3.5mm TRS/TRRS耳机监听口

模拟模式：
3.5mm TRS音频输出口

数字模式:

1. 将数字/模拟模式切换开关切换到“ 📷 ”模式;

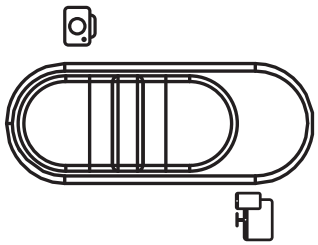

2. 通过二合一音频连接线和相关音频转接线/转接头连接麦克风和手机/电脑,连接成功后,数字工作状态指示灯常亮(如指示灯不亮,可能是兼容问题/系统问题导致); 根据个人需求选择是否进行监听。

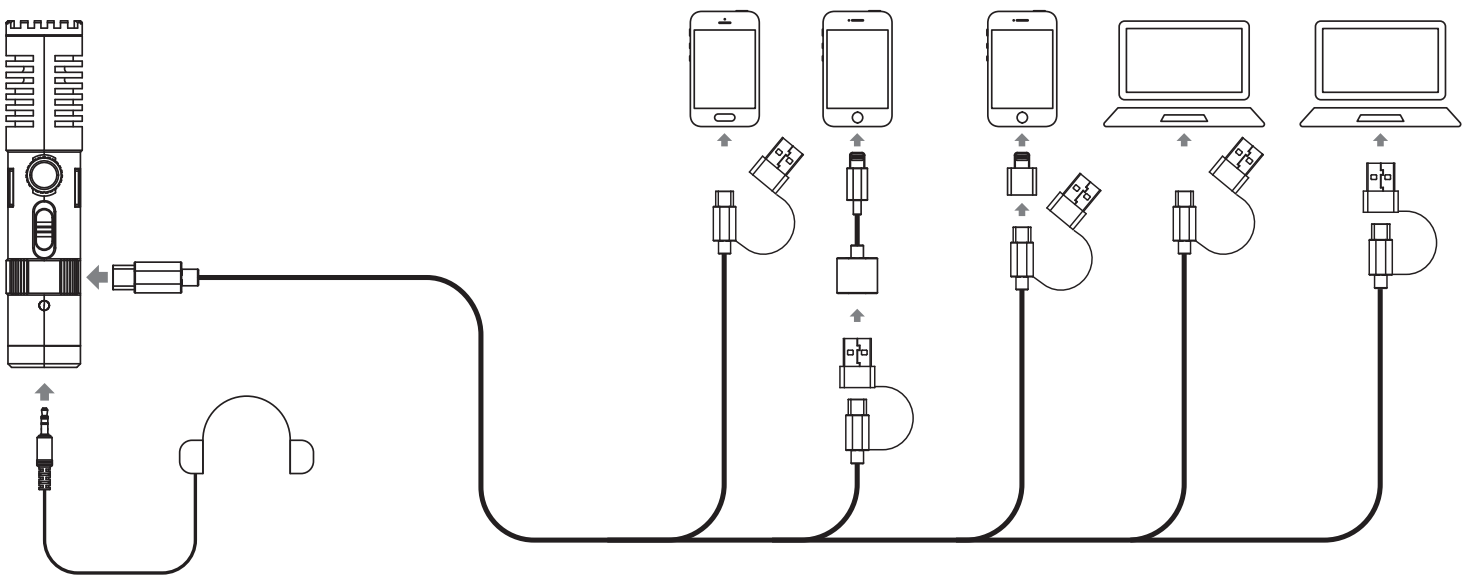

模拟模式：

1. 将数字/模拟模式切换开关切换到“ ”模式；

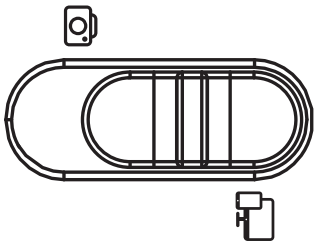

2. 搭配相机使用时，通过3.5mm TRS-TRS音频连接线连接即可；搭配手机或电脑使用时，通过3.5mm TRS-TRRS音频连接线连接即可。

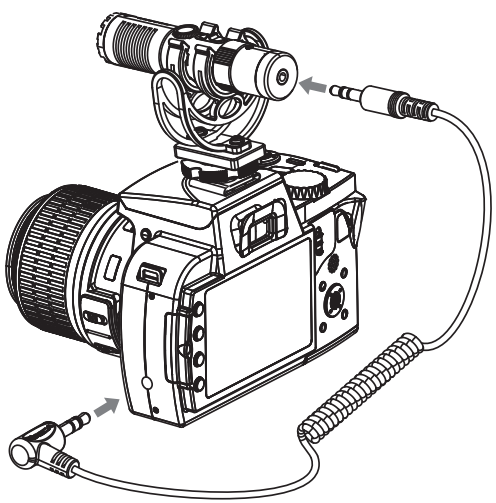

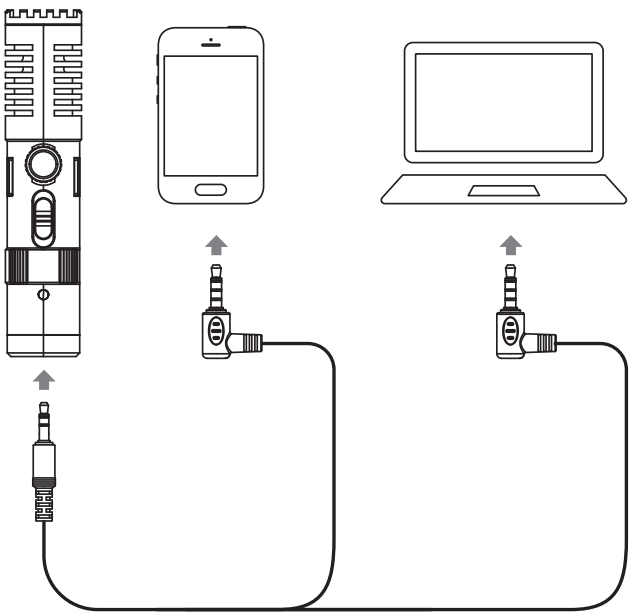

搭配3.5mm TRRS接口设备时，请自行购买相应的音频连接线

技术规格

指向性	超心型指向
灵敏度	模拟输出：-35±2dB 数字输出：-15dB ~ -35dB ±2dB
频响	60Hz ~ 20kHz
最大声压级	120dB
信噪比	70dB
等效噪声	24dBA
动态范围	96dB
采样率	48kHz
位深	24-bit
输出接口	3.5mm TRS / USB-C
监听接口	3.5mm TRS/TRRS
尺寸	Φ22mm * L92mm
净重	37g
工作温度	0℃ ~ 50℃
储存温度	-20℃ ~ 60℃

扫二维码关注
科唛官方公众号

COMICA科唛

COMICA科唛

COMICA科唛

COMICA科唛

邮箱：support@comica-audio.com
电话：400-8303-981
网址：comica-audio.com
版权及科唛商标归咔莱科技有限公司所有