COMICA
PROFESSIONAL AUDIO EQUIPMENT

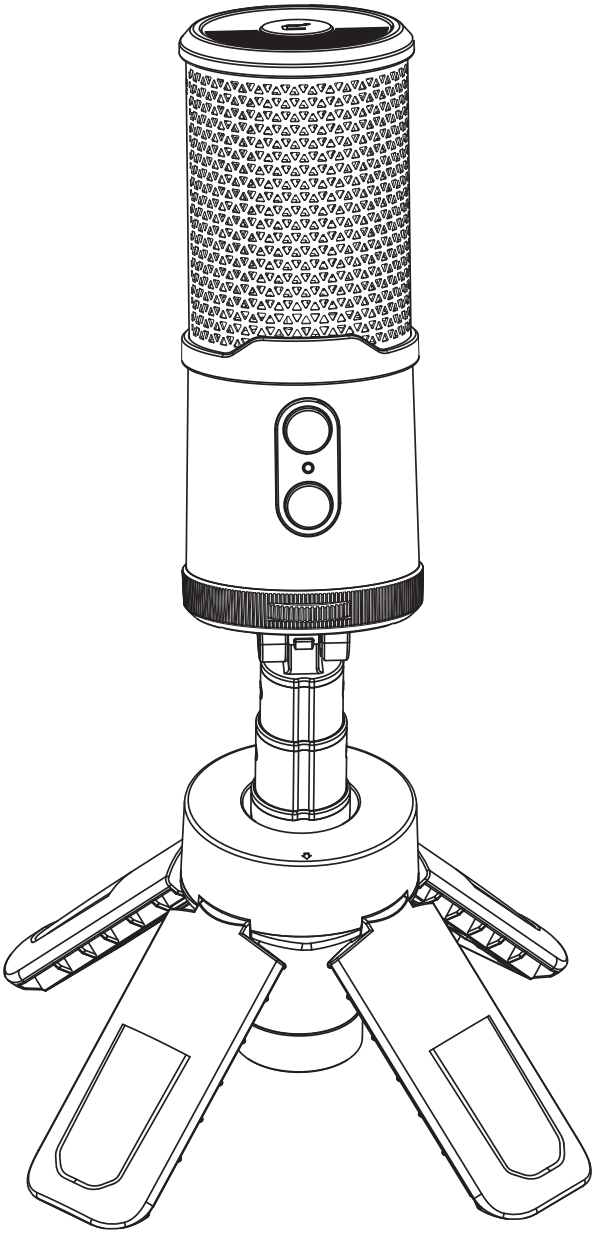

EJoy Uni S

RGB Cardioid Condenser USB Microphone

User Manual

Foreword

Thanks for purchasing Comica EJoy Uni S

Main Features

- 48kHz/24bit Recording, Professional Studio Quality
- Support Gain Control, Monitoring, CalMix® AI Denoise and Muting
- Dynamic Radiant RGB Light with 4 Optional Effects
- USB-C Digital Output, Universal for Smartphone/Computer
- Integrated Magnetic Retractable Stand, Portable and Stable
- Adjustable Sound Pickup Angle, To Use at Will

Notice

⚠ Please aim the front of the microphone at the sound source to get an excellent recording

⚠ When connect the mic with computer, please click sound setting and choose "Comica_EJoy Uni S" as the output and input device

When connect the microphone with computer:

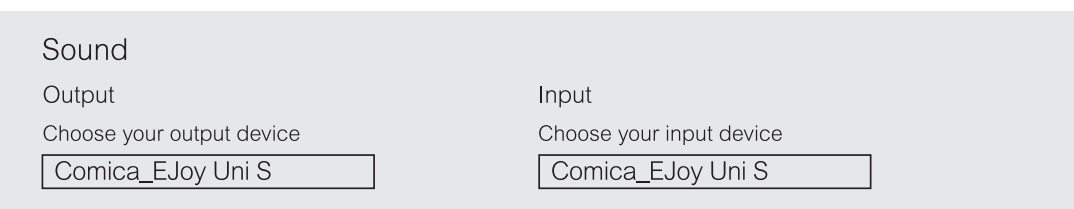

⚠ If the input sound is too loud when connected to the computer, users can adjust the computer's "Microphone Properties-Levels" to reduce the gain (Take the Windows system as an example)

When connect the microphone with computer:

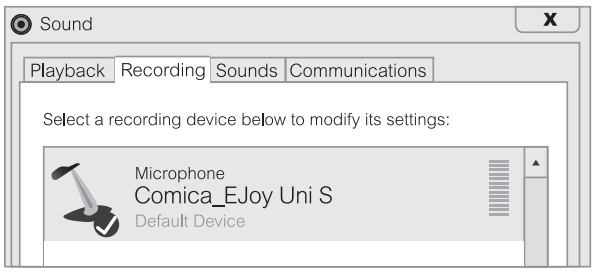

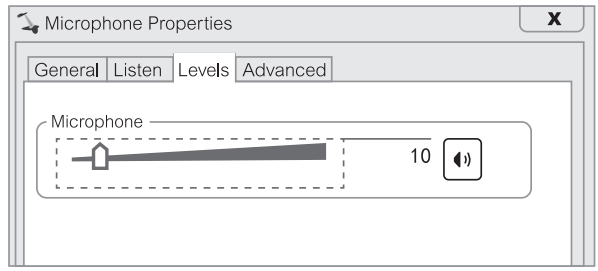

⚠ Do not use this equipment in the vicinity of a heat source or interference source, such as radiator, oven, refrigerator or air conditioner

⚠ This product is a high-precision instrument, please avoid falling, collision or pounding

⚠ Do not use the equipment in rain or in a damp environment to avoid short-circuit danger

⚠ Please store the product in a dry environment

⚠ When connect the mic with computer, please click sound setting and choose "Comica_EJoy Uni S" as the output and input device

Packing List

Main Part：

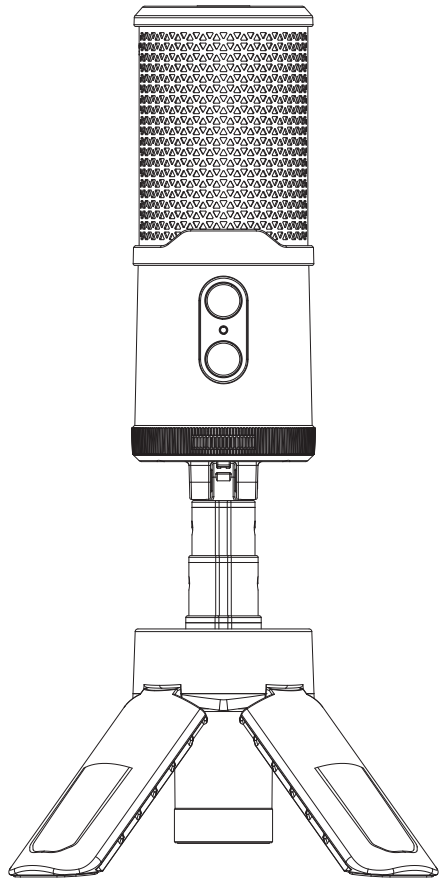

Microphone

Accessories：

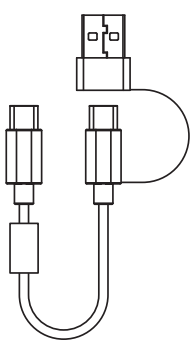

2 in 1 Audio Cable

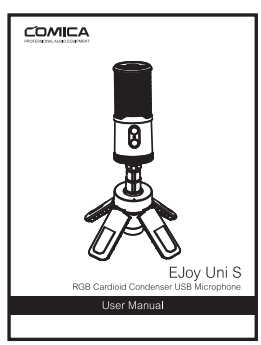

User Manual

Warranty Card

Components and Instruction

Microphone:

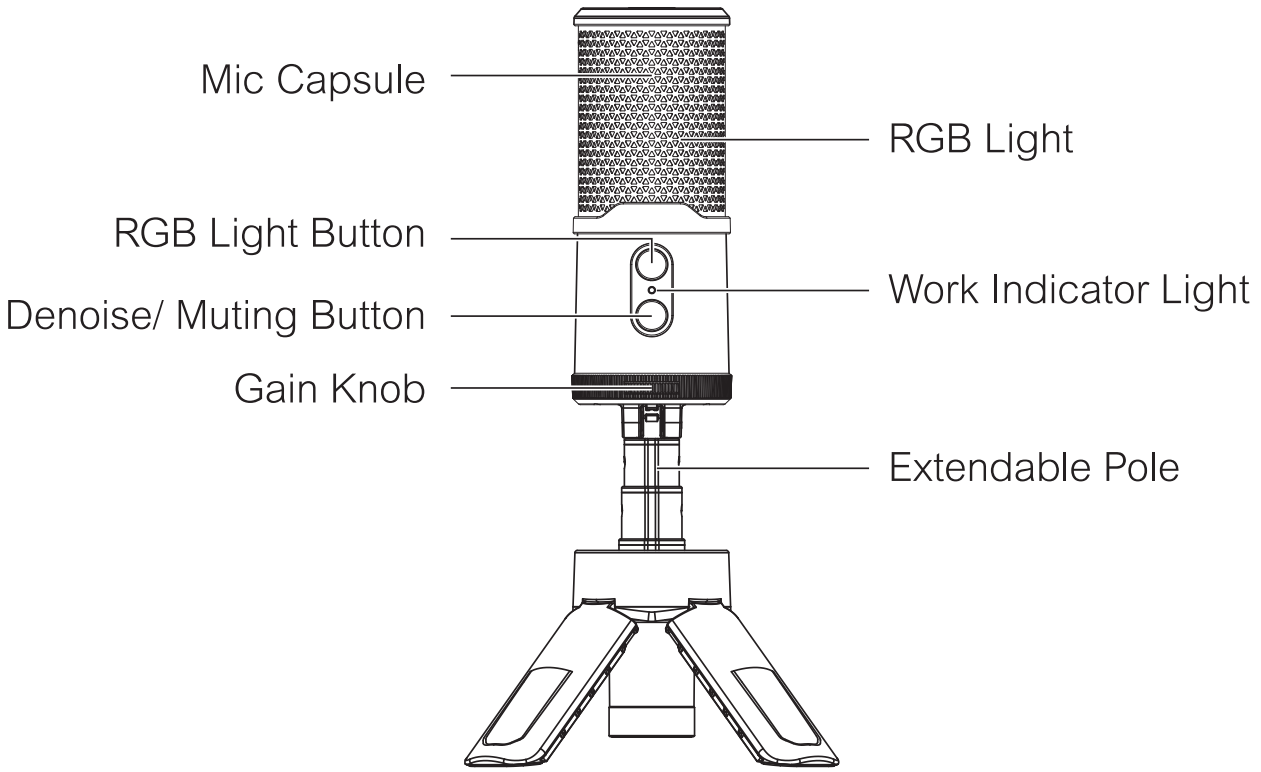

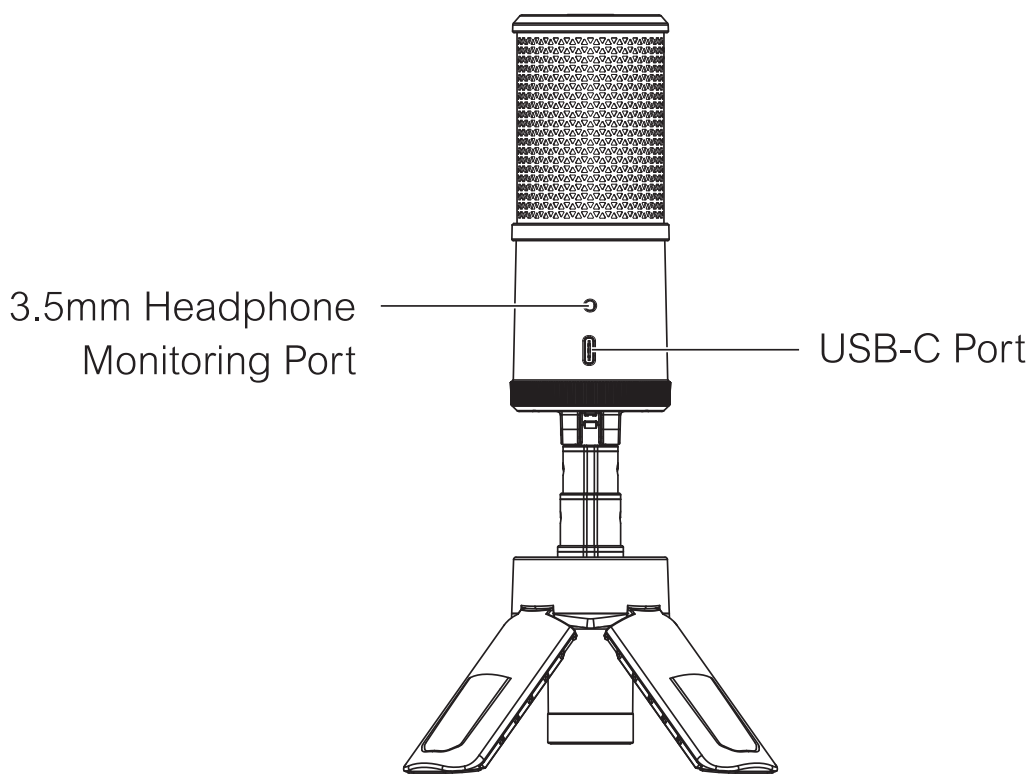

1. Mic Capsule

2. RGB Light

Colorful breathing light/ dynamic gradient/audio dynamic/comica orange four RGB light effects; red light keeps on in muting state

3. RGB Light Button

Long press to turn light effect on/off, short press to switch four light effects

4. Work Indicator Light

Normal State	Blue light keeps on
Denoise State	Green light keeps on
Muting State	Red light keeps on

5. Denoise/ Muting Button

Long press to turn denoise on /off, short press to turn muting on/off

6. Gain Knob

Move left to decrease output gain level and headphone monitoring volume, move right to increase output gain level and headphone monitoring volume

7. Extendable Pole

It can be extended up and down to adjust the height of microphone

8. 3.5mm Headphone Monitoring Port

Plug in 3.5mm TRS/TRRS headphone for real-time monitoring

9. USB-C Port

Connect to devices for digital audio output via the 2 in 1 audio cable

Installation：

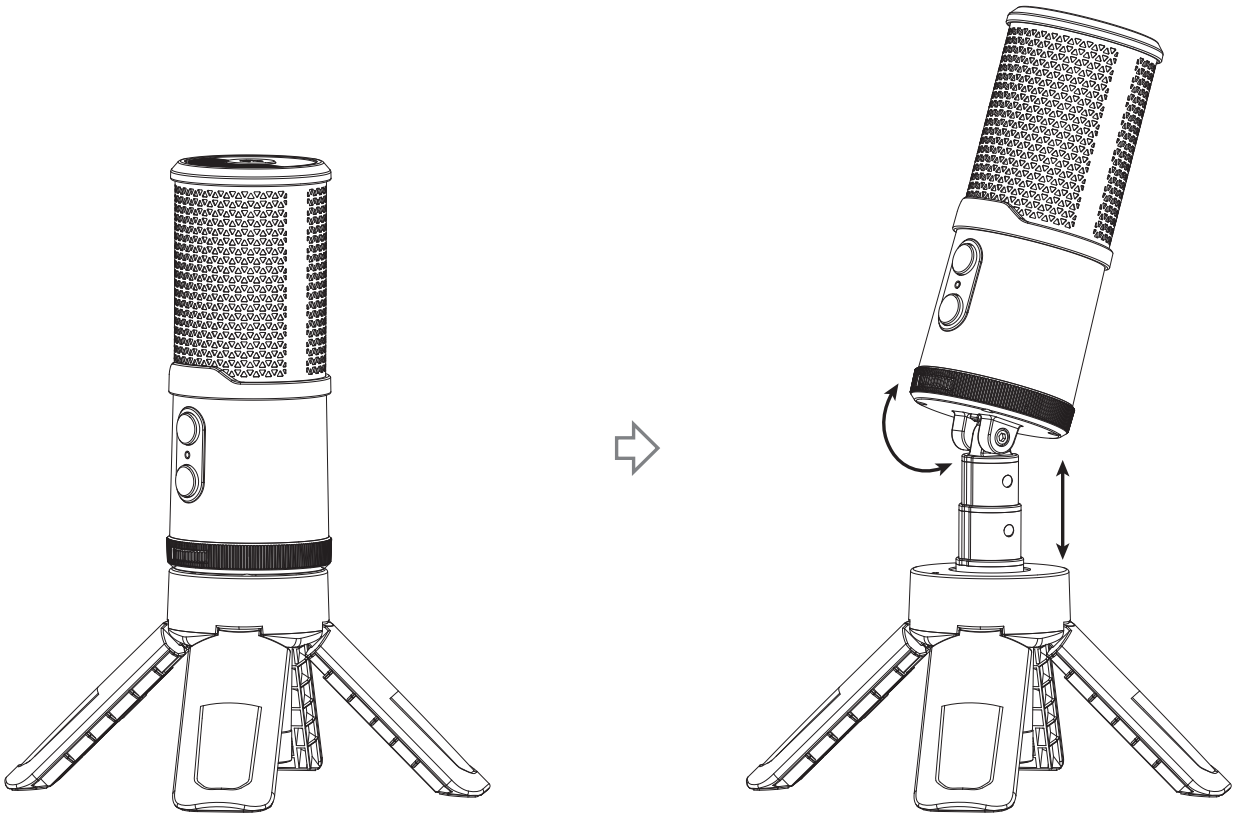

Usage：

Connected the mic with smartphone/computer through 2 in 1 audio cable and related audio adapter cable/adapter; Choose whether to monitor according to your needs

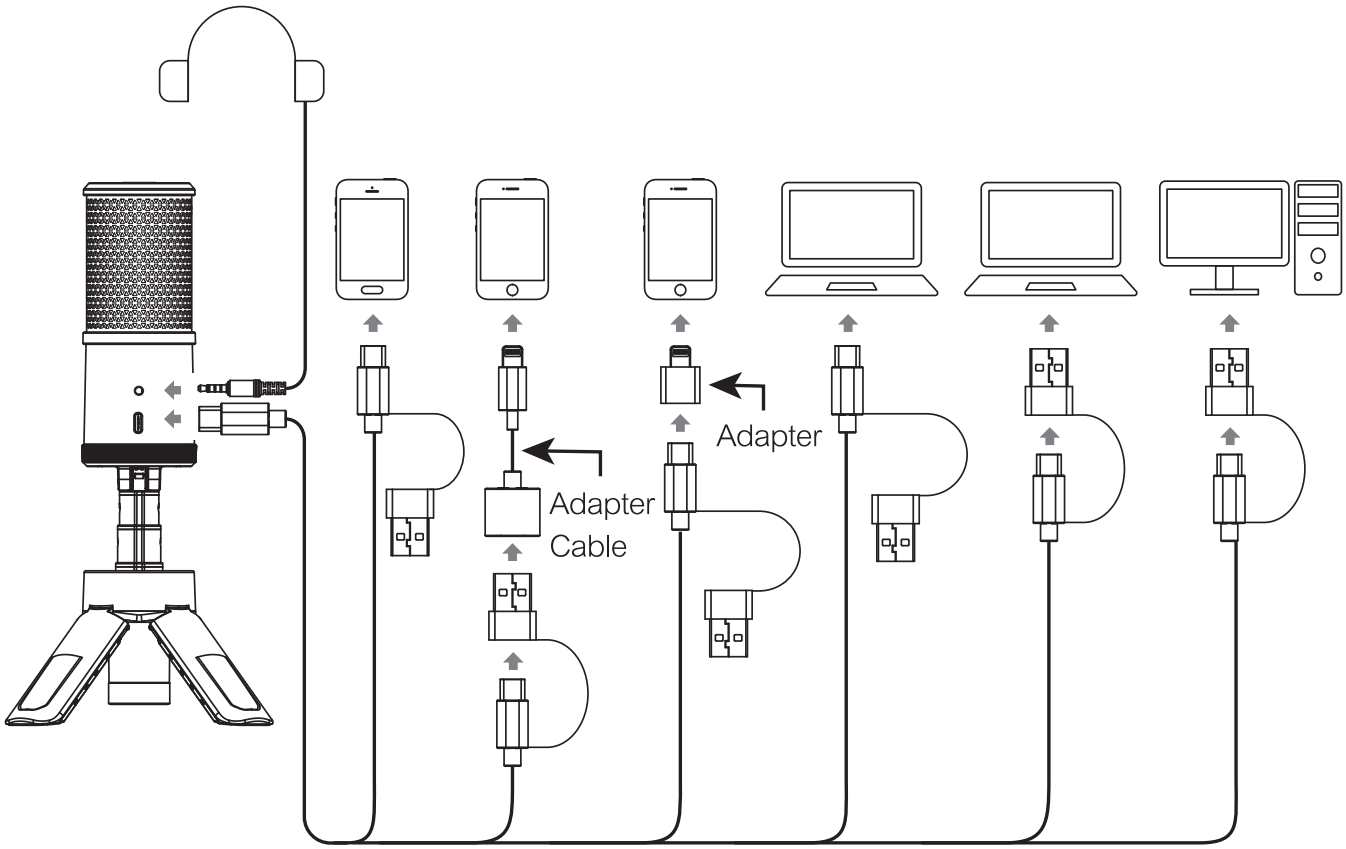

Please purchase a USB C-Lightning adapter/cable that supports OTG function when connected with lightning port devices

Specifications

Directivity	Cardioid Directivity
Mic Capsule Sensitivity	-35dB±2dB
Frequency Range	20Hz ~ 20kHz
Maximum SPL	105dB (@ 1% THD)
Signal/Noise	70dB SPL(A-weighted,as per IEC651)
Equivalent Noise	24dB SPL(A-weighted,as per IEC651)
Dynamic Range	81dB SPL(A-weighted,as per IEC651)
Sampling Rate	48kHz
Bit Depth	Microphone Recording:24-bit Headphone Monitoring: 16-bit
Output Interface	USB-C
Monitoring Interface	3.5mm TRS/TRRS
Net Weight	Microphone Body: 206g
Dimension	Microphone Body: Φ56.4 x L229mm
Operating Temperature	0℃~+50℃
Storage Temperature	-20℃~+60℃

Website: comica-audio.com

Facebook: Comica Audio Tech Global

Instagram: Comica Audio

YouTube: Comica Audio

COMICA is a registered trademark owned by Commlite Tech Co.,Ltd

Email: support@comica-audio.com

COMICA 科唛
PROFESSIONAL AUDIO EQUIPMENT

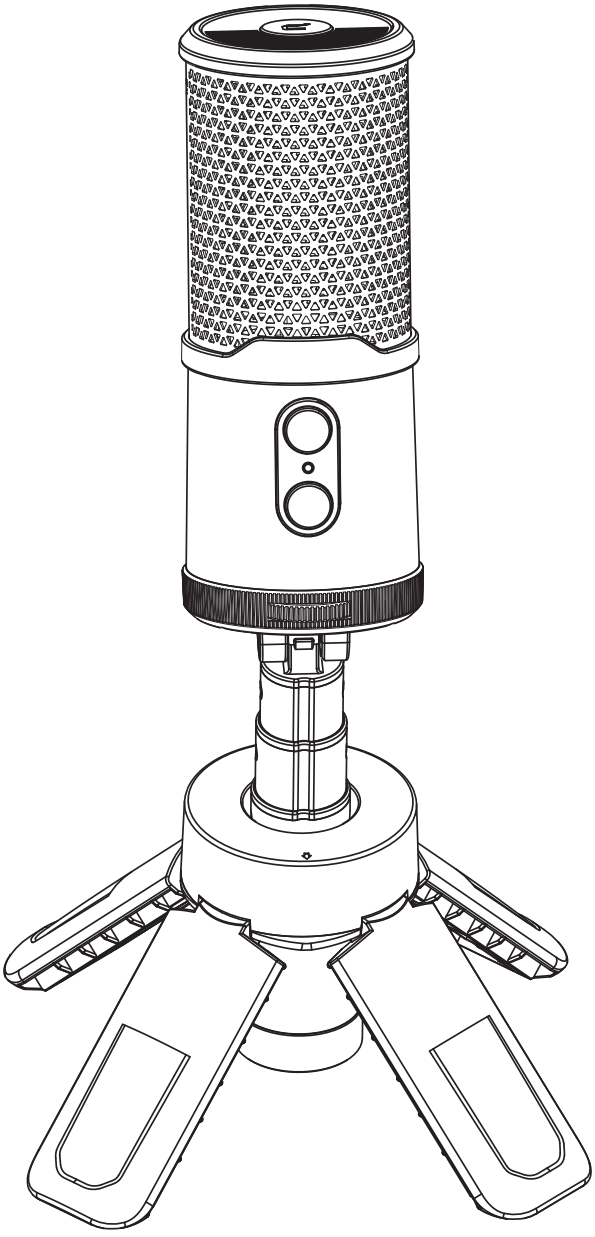

享听Uni S

RGB心型电容USB麦克风

使用说明书

前言

感谢您购买科唛享听Uni S

主要功能

- 专业棚级音质，48kHz/24bit录音
- 增益调节，实时监听，一键CalMix® AI降噪及静音
- 4种RGB动态灯效模式选择，唯美氛围
- USB-C数字输出，通用于手机、电脑
- 一体化磁吸折叠脚架，便携稳固
- 可调拾音角度，使用随心

注意事项

⚠ 为获得更好的录音效果，请将麦克风的正面对准音源

⚠ 当麦克风连接电脑使用时，请打开声音设置界面选择“Comica_EJoy Uni S”为输出和输入设备

麦克风连接电脑使用时：

⚠ 若连接电脑输入时声音偏大，可以调节电脑“麦克风属性-级别”降低增益 (下面以Windows系统为例)

麦克风连接电脑使用时：

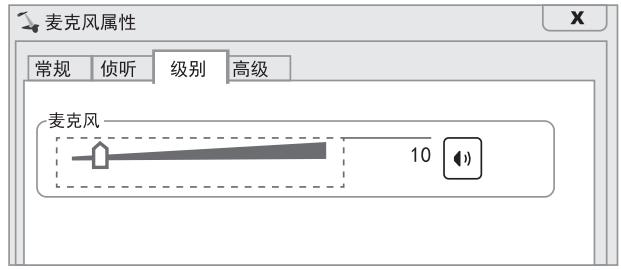

⚠ 请勿将本设备放置在热源或干扰源附近使用，如散热器、烤箱、冰箱、空调等

⚠ 本产品属于高精密仪器类产品，请避免使用时掉落、碰撞或重击

⚠ 不要在雨中或潮湿的环境中使用该设备，否则会有短路的危险

⚠ 请在干燥环境中对该产品进行保存

包装清单

主体：

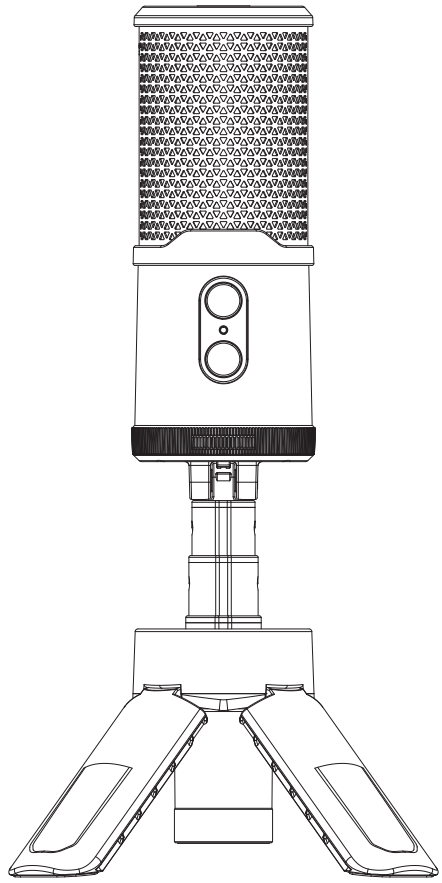

麦克风

配件：

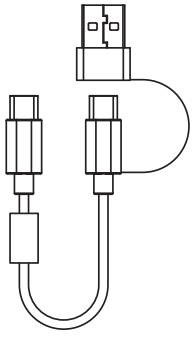

二合一音频连接线

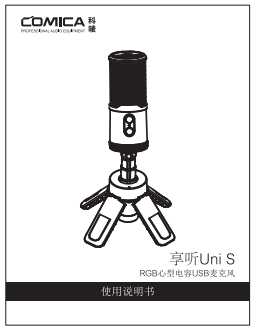

说明书

保修卡

部件介绍及说明

麦克风：

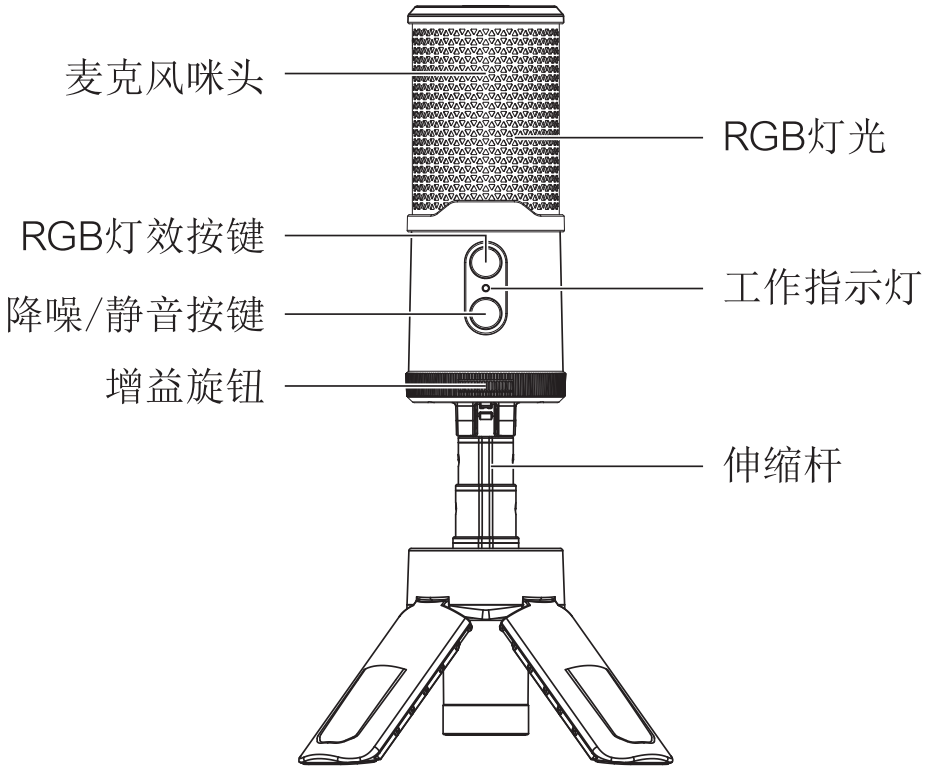
麦克风咪头
RGB灯光
RGB灯效按键
工作指示灯
降噪/静音按键
增益旋钮
伸缩杆

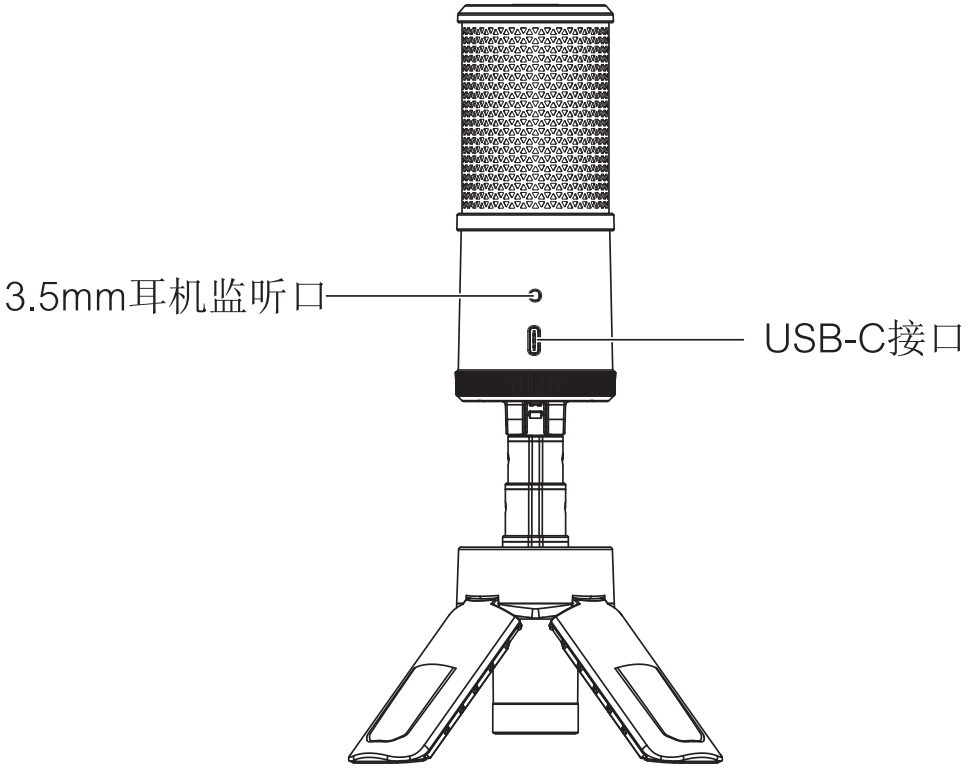
3.5mm耳机监听口
USB-C接口

1. 麦克风咪头

2. RGB灯光

彩色呼吸灯/动态渐变/音频动态/科唛橙四种RGB灯效；静音状态下红灯长亮

3. RGB灯效按键

长按开启/关闭灯效；短按切换四种灯光效果

4. 工作指示灯

正常状态	蓝灯长亮
降噪状态	绿灯长亮
静音状态	红灯长亮

5. 降噪/静音按键

长按开启/关闭降噪；短按开启/关闭静音

6. 增益旋钮

向左调节减小输出增益及耳机监听音量，向右调节增大输出增益及耳机监听音量

7. 伸缩杆

可上下伸缩调节麦克风高度

8. 3.5mm耳机监听口

可插入3.5mm TRS/TRRS耳机进行实时监听

9. USB-C接口

可通过二合一音频连接线连接设备输出数字音频

安装：

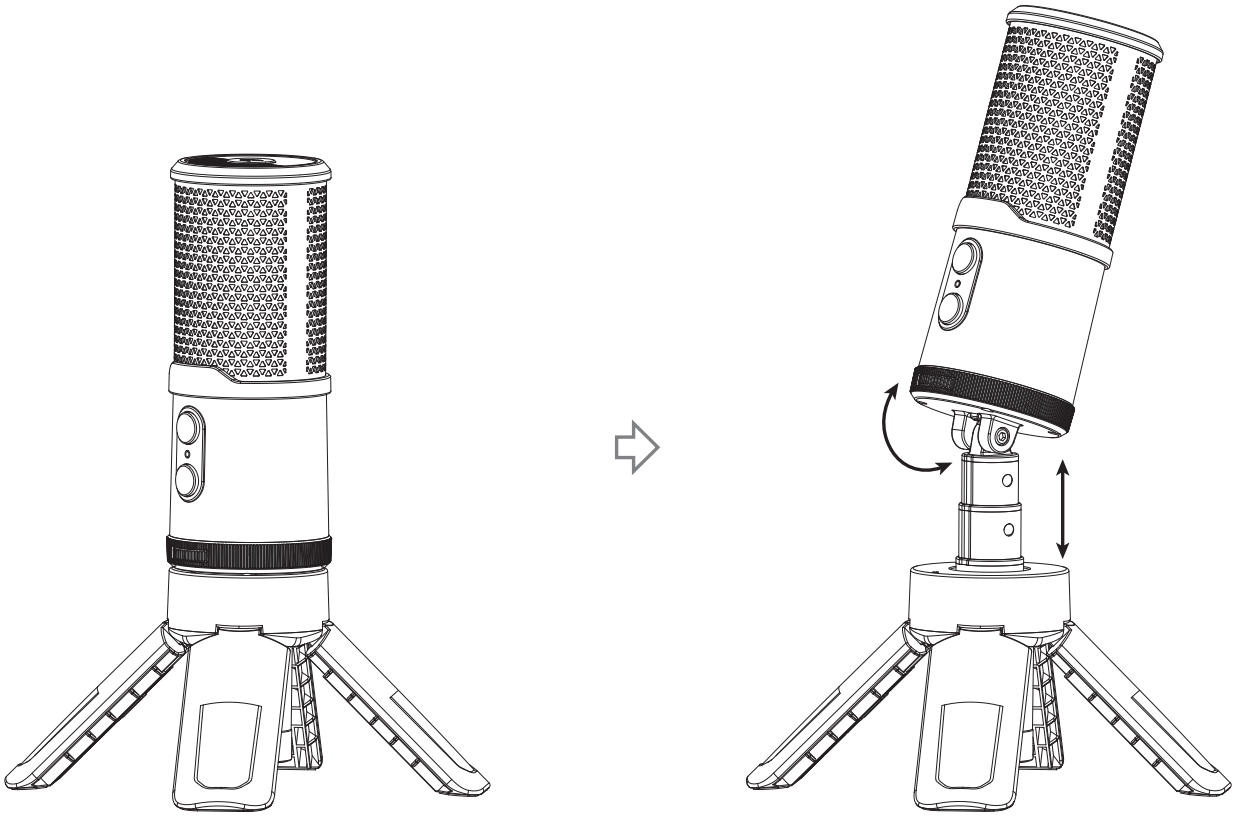

使用：

通过二合一音频连接线和相关音频转接线/转接头连接麦克风和手机/电脑，根据个人需求选择是否监听

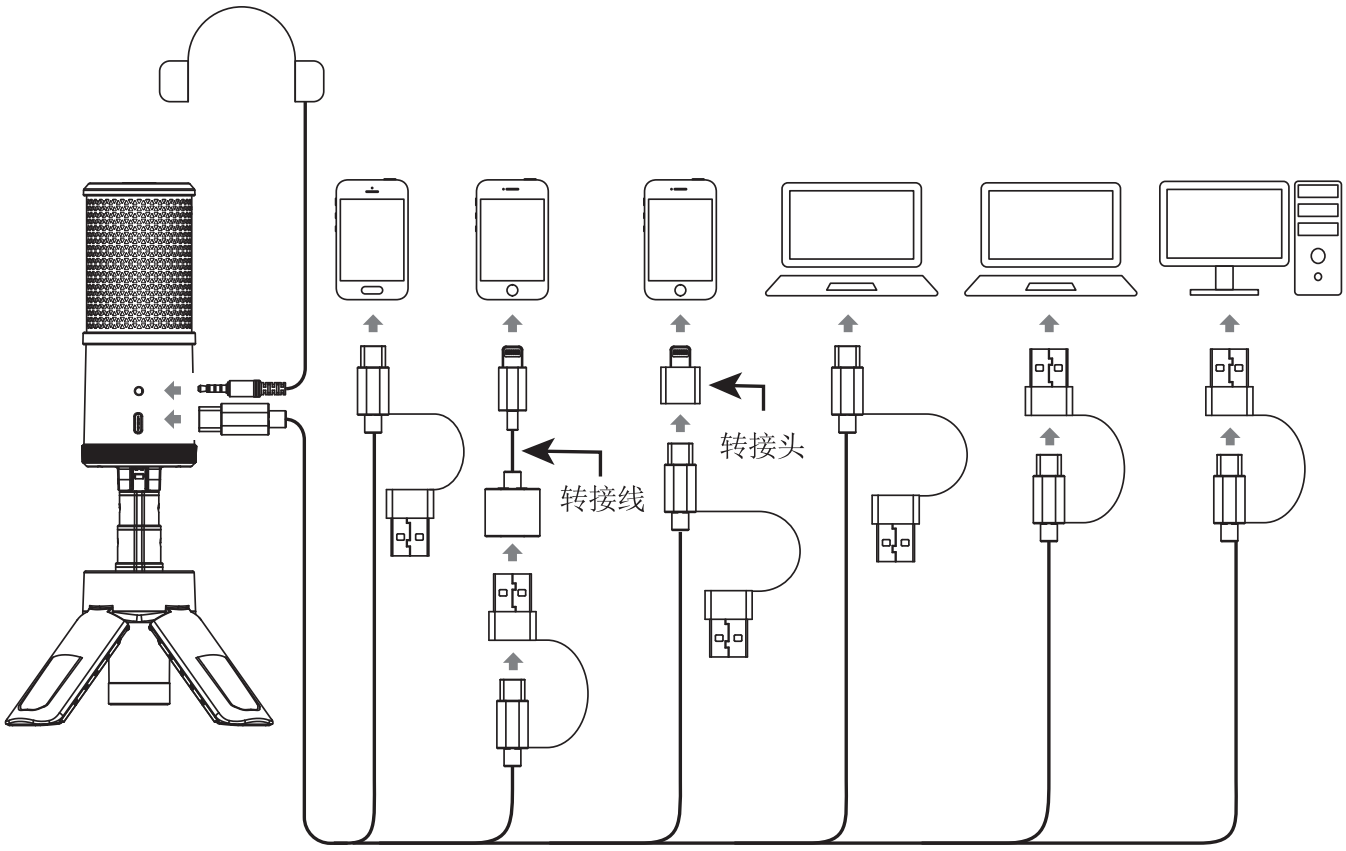

搭配Lightning接口设备时，请自行购买支持OTG功能的USB C-Lightning转接线/转接头

规格参数

指向性	心型指向
咪头灵敏度	-35dB±2dB
频率范围	20Hz ~ 20kHz
最大声压级	105dB (@ 1% THD)
信噪比	70dB SPL(A-weighted,as per IEC651)
等效噪声	24dB SPL(A-weighted,as per IEC651)
动态范围	81dB SPL(A-weighted,as per IEC651)
采样率	48kHz
位深	麦克风录音：24-bit　　耳机监听：16-bit
输出接口	USB-C
监听接口	3.5mm TRS/TRRS
产品重量	麦克风主体：206g
产品尺寸	麦克风主体：Φ56.4 x L229mm
工作温度	0℃~+50℃
储存温度	-20℃~+60℃

扫二维码关注
科唛官方公众号

COMICA科唛

COMICA科唛

COMICA科唛

COMICA科唛

邮箱：support@comica-audio.com
电话：400-8303-981
网址：comica-audio.com
版权及科唛商标归咔莱科技有限公司所有